Lecture Note #5

IIT Kharagpur

2019 1st Semester

Short Course

Design of Aircraft Components using Composite Materials

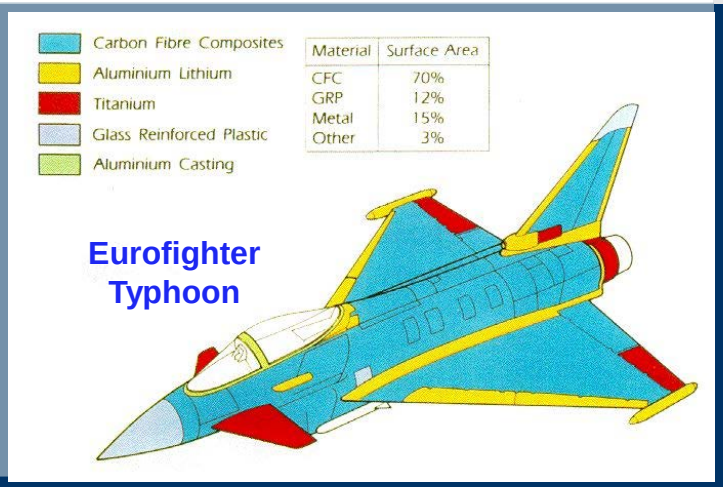

Indian Institute of Technology-Kharagpur

Department of Aerospace Engineering

Professor Changduk Kong

Design Practice

Composite Design Case Study
(Fuselage Floor Beam)

Indian Institute of Technology-Kharagpur
Department of Aerospace Engineering
Professor Changduk Kong

Composite Design Case Study
(Fuselage Floor Beam)

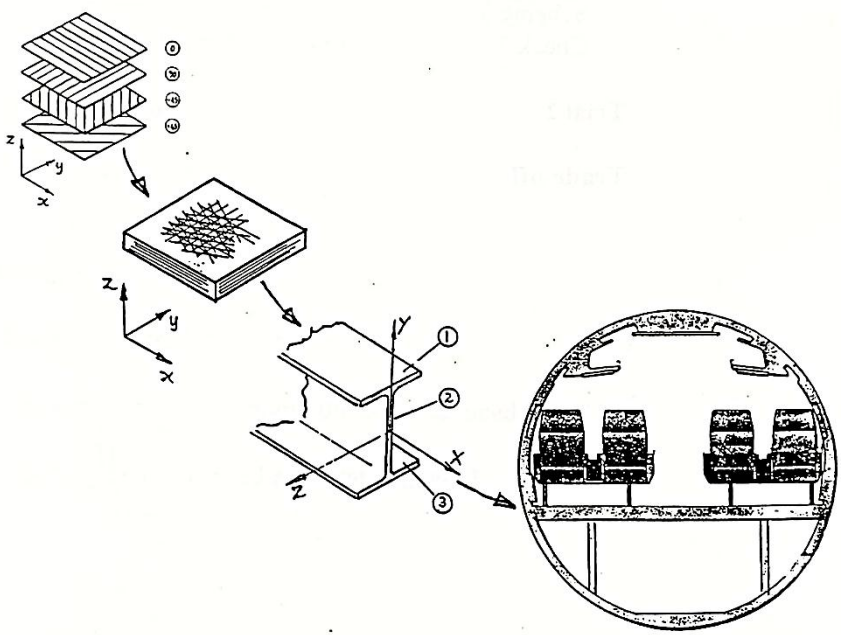

This case study is intended to introduce the composite design process in a rationalized format. The initial trial schemes used are far from optimum and illustrate the need to use solutions that exploit more than one key design advantage.

Conceptual design result of 95-seat regional turboprop aircraft (Derivative: 76-seat)

Table KC950 top level requirements (TLARs)

Parameter	Target value	Remark
Passengers	95 (76)	Program office requirement by market analysis
Seat pitch	32inch (standard)	High density/small A/C (See Table 5.4 Conceptual design)
Cargo	6.0 ft^3/passenger	FAR 25 Regulation
Range	1,000nm	Program office requirement by market analysis
Cruise speed	M0.6 (360knot)	Program office requirement by market analysis

- **Conceptual design results** based upon configuration design guide references, **FAR 25 regulations** and **compared with** other competitive aircrafts geometry such as **Q400 and ATR 72**.
- **Overall shape of the 95-seat aircraft, the KC950**.

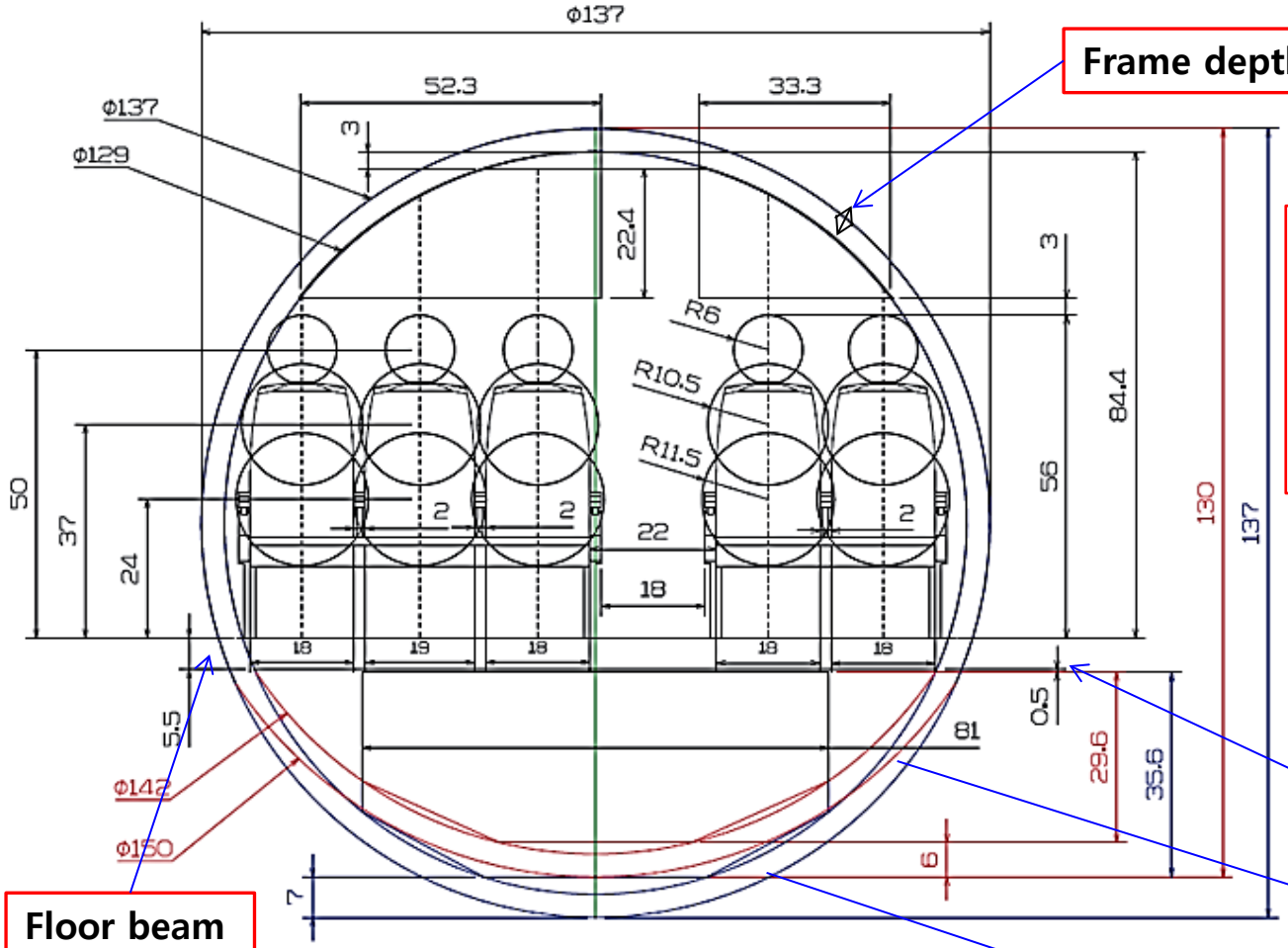

Frame depth: 4”

Unit : inch

Cabin abreast: 2+3 (2+2)
Fuselage width: 137 (116)
Fuselage height: 137 (116)
Seat width: 18
Aisle width: 18
Aisle height: 84.4 (76.8)
Underfloor cargo height: 35.6 (22.7)

Seat rack supporting structure

. Double bubble shape

Floor beam depth: 5.5”

. Single circle shape (Finally selected)

Fig. KC950 fuselage cross section (unit: in)

* 76 seats type: 4 seat per a row (2+2 cabin abreast, single aisle)

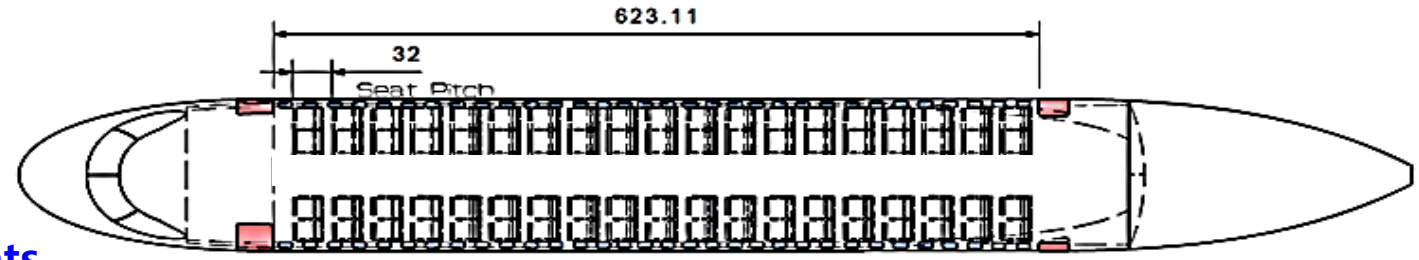

76 seats

FWD body l/d_f: 1.51

AFT body l/d_f: 3.26

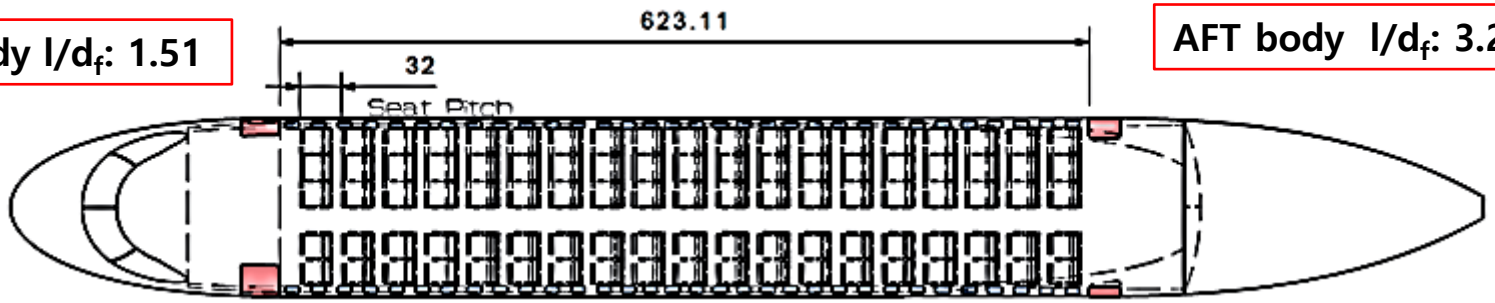

95 seats

Passengers:(2+3)*19=95seats, (2+2)*19=76seats
Cabin length: 623,11 in (32 in seating pitch)
Overall length: 1133.6 in (1033.4 in)
Fuselage diameter (d_f): 137 in (116 in)
Service facilities: to be included
Folding seats: 2+ to be included
Passenger exits: Front (C type) (I type) + Rear (I type)

Contents

- ❖ **Task**
- ❖ **Original Metal Design**
- ❖ **New Composite Design**
- ❖ **Trial 1**

  Scheme1 Structure, Material, manufacture
  Check1

  Scheme2
  Check2

  Scheme3
  Check3

- ❖ **Trial 2**
- ❖ **Trade-off**

Exercise Note

For the purpose of this exercise we shall be initially designed by the geometric envelope and FE fuselage floor beam model of the original metal design as a first estimate of the expected overall dimensions and loading. Then the original metal I-beam is replaced with one made from CFRP using the same structural as initial simple trial.

Procedure

- ✓ **Define** **Structure** **Material** **Manufacture**
- ✓ **Scheme** **Structure** **Material** **Manufacture**
- ✓ **Check** **Structure** **Material** **Manufacture**

  Stiffness
  Strength
  Stability
  Etc.

- ✓ **Refine**
- ✓ **Trade-off**
- ✓ **Iterate!**

Original Metal Design

Definition

Structural Scheme

Structural configuration

- Floor beam : pinned ends
- Support struts : pinned / fixed

Section configuration

- Floor beam : I-section

Material Scheme

- High strength ally

Manufacturing scheme

- Extrusion or machining
- Assembly : rivets , bolts

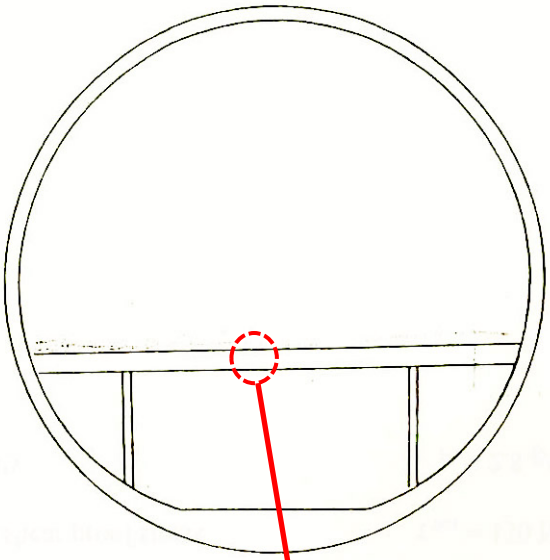

Floor beam and fuselage frame assembly

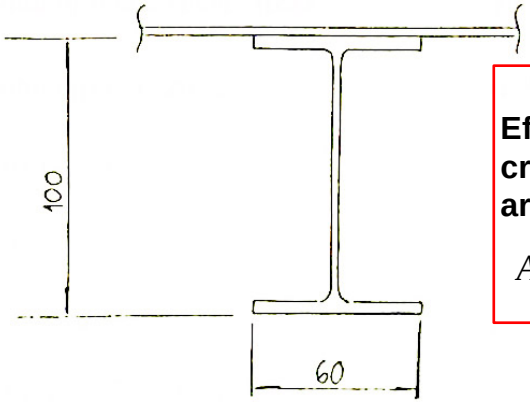

Effective beam cross-section area :

$A = 450mm^2$

Floor beam section

FE Model Results

2D Beam elements

At ultimate loads :

Maximum compressive axial load

$$F_x = -8908\ N\ at\ \ node\ \ 41$$

Maximum shear force

$$F_y = -6375\ N\ at\ node\ \ 40$$

Maximum bending moment

$$M_z = -1.51 \times 10^6\ Nmm\ \ at\ \ Node\ 42$$

$F'_x \cong \frac{8EA\delta^2}{3L^2}$:
$F''_x \cong \alpha \Delta T E A$
(axial extension Deformation constrained by pinned)

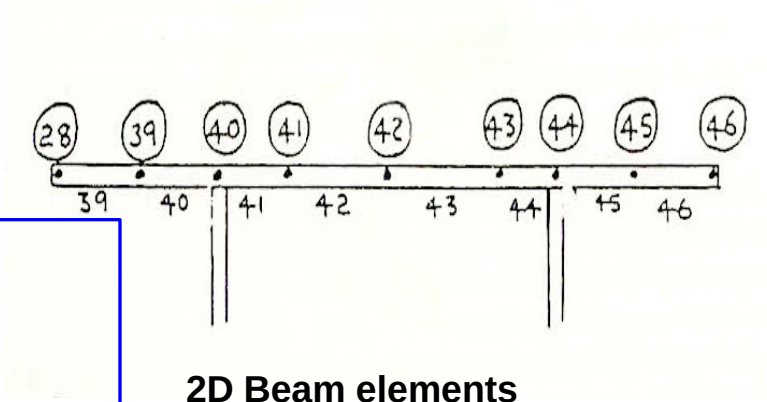

2D Beam elements

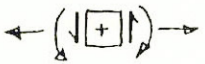

Internal forces and moments wrt +ve sign convention

Design factors

Proof factor=1.0

Ultimate safety factor=1.5

Environment

Internal : Cabin/Hold area

Min temp = 0℃

Material data

Aluminum Alloy xxx

Young's Modulus	$E = 70000 N/mm^2$
Shear modulus	$G = 27000 N/mm^2$
Poisson ratio	$\nu = 0.3$
Design ultimate stress	$\sigma_{ult} = 340 N/mm^2$
Design ultimate shear stress	$\tau_{ult} = 195 N/mm^2$
0.1% proof stress	$\sigma_{001} = 225 N/mm^2$
0.1% shear proof stress	$\tau_{001} = 130 N/mm^2$
Density	$\rho = 2.8 g/cm^3$

NEW COMPOSITE DESIGN Trial 1

SCHEME STRUCTURE

Configuration

Using original metal design configuration

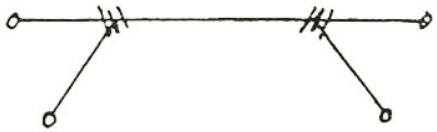

Section

Doubly symmetric I section
Using original material dimensions : b_w=100 mm, b_f=60 mm

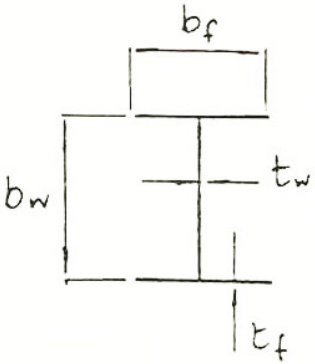

Layup

Try minimum balanced layups
Using 0° on flanges , 45° on webs

SCHEME MATERIAL

Using UD-HSCFEP Material – initially sanctioned
Material supplies values – see data sheet

SCHEME MANUFACTURING

"In house" hand layup / vac-bag / autoclave

Material Data (Specified initial trial material)

UD-HSCFEP UD High Strength Fibre Epoxy tape

Longitudinal modulus	$E_1 = 140000 N/mm^2$
Transverse modulus	$E_2 = 10000 N/mm^2$
Shear modulus	$G_{12} = 5000 N/mm^2$
Poisson ratio	$v_{12} = 0.3$
Longitudinal tensile strength	$X_t = 1500 N/mm^2$
Longitudinal compressive strength	$X_c = -1200 N/mm^2$
Transverse tensile strength	$Y_t = 50 N/mm^2$
Transverse compressive strength	$Y_c = -250 N/mm^2$
In plane shear strength	$S = 70 N/mm^2$
Density	$\rho = 1.5 g/cm^3$
Cured ply thickness	$t_p = 0.125 mm$
Longitudinal expansion coefficient	$\alpha_1 = 0$
Transverse expansion coefficient	$\alpha_2 = 30 \times 10^{-6}$
Stress free temperature	$T_{sf} = 120°C$

Allowable values?

Metal Beam
I_z=0.856x10^6 mm^4
Flange t~2.2mm
Web t~1.5mm

CHECK STRUCTURE
Stiffness

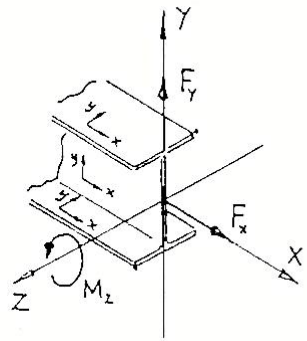

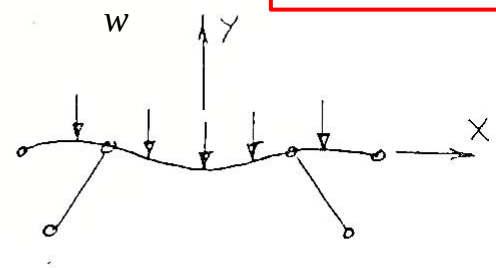

- Design not to exceed allowable deflection at design condition $\leq \quad v = \dfrac{kwL^4}{EI}$

  Actual deflection ≤ allowable deflection

- Here, design to match or exceed original beam rigidity $EI = 5.992 \times 10^{10} \ Nmm^2$

  i.e. $\overline{E_x I_z} \geq EI$

- Composite beam rigidity: metal beam rigidity = $\overline{E_x I_z} = \sum_i \left(E_{x_i} I_{z_i} \right)$

  . Sum rigidity production for each element:

  . Accounting for flange 0°layup only:

$$\approx 2 \times E_1 \left(b_f t_{f_\sigma} \right) \left(\frac{b_w}{2} \right)^2 = 2 \times 140000 \times (60 \times 0.125) \times \left(\frac{100}{2} \right)^2 = 5.25 \times 10^9 \rightarrow RF = \frac{5.25 \times 10^9}{5.992 \times 10^{10}} \rightarrow \therefore \mathbf{RF=0.088}$$

→Increase trial flange layup to 10×0° **plies :** $\overline{E_x I_z} = 5.25 \times 10^{10} \ Nmm^2 \rightarrow$ **∴RF=0.88**

But still slightly low – but ok at this stage ! *(Expect more secondary plies to be added.)*

Strength

*Flange

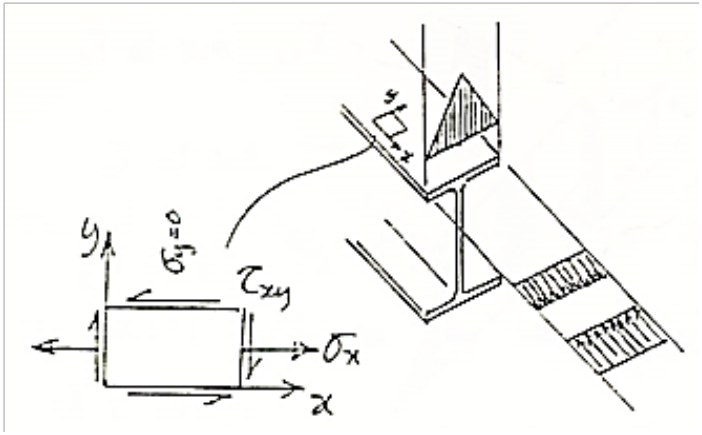

- Design not to exceed allowable stress condition

  i.e. design for : actual stress ≤ allowable stress

$$\sigma_x \le \sigma_x^*$$: for 1st check consider only

$$\left|\frac{F_x}{A} + \frac{M_z(\pm y)}{I_z}\right| \le \sigma_x *$$: i.e. most significant stress

- "Netting stress" : $$\left|\frac{F_x}{2(t_{f_0}.b_f)} + \frac{M_z\left(\pm\frac{b_w}{2}\right)}{2(t_{f_0}b_f)\left(\frac{b_w}{2}\right)^2}\right| \le |\sigma_1 *|$$ for flange 0° layers only

$$\left|\frac{-8908}{2(10\times 0.125\times 60)}+\frac{-1.51\times 10^{6}\times\left(\pm\frac{100}{2}\right)}{2(10\times 0.125\times 60)\times\left(\frac{100}{2}\right)^{2}}\right|\leq|1500,-1200|$$

$$|-59.4\pm 201.3|\leq|1500,-1200|$$

$$|141.9\ ,\ -260.7|\leq|1500\ ,-1200|$$

- Top flange compression most critical!

$$\rightarrow RF=\frac{-1200}{-260.7}=4.6$$

RF=4.6

- Note $\pm 45^{o}$ plies carried over from web cover shear strength of flanges

Strength

***Webs**

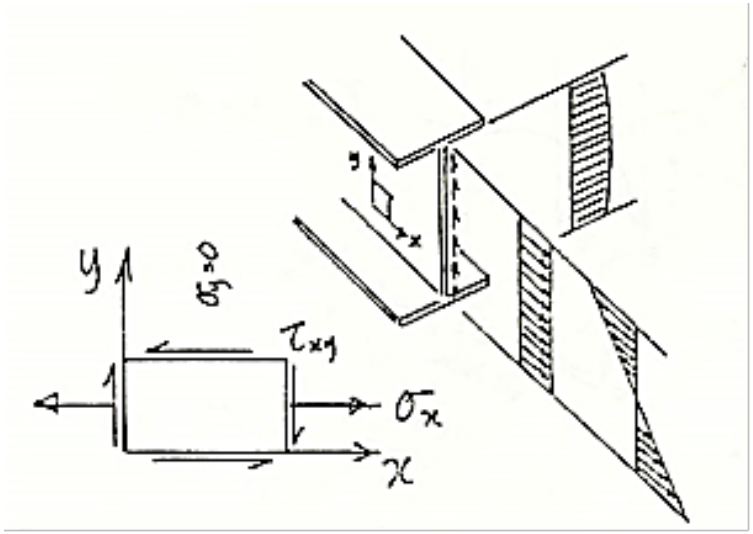

- Design not to exceed allowable stress condition

  design for : $actual\ \ stress \leq allowable\ \ stress$

  $\tau_{xy} \leq \tau_{xy}$ * : For first check consider τ_{xy} only

  $"\tau_{xy}" \leq \tau_{1_{@45^\circ}}$ * : consider shear as tens, comp @45°

- "netting stress" : $\dfrac{F_y}{\dfrac{t_{w\pm 45^o}}{2} b_w}$ 4 plies $(\pm 45)_s$

$$\left|\frac{-6375}{(2\times 0.125)\times 100}\right| \le |-1200|$$: using lowest of tension or comp. values for τ_1 *

$$|-255| \le |-1200|$$

$$\rightarrow RF = \left|\frac{-1200}{-255}\right|$$

RF=4.7

Stability

- Need flexural stiffness "D" values for quantified analysis
- Account for panel buckling by lay up guidelines at this stage
  : include Q I layers.

$$where \quad D = \frac{1}{3}\sum \left[\overline{Q}\right]_k (z_{k+1}^3 - z_k^3) \quad : \quad Flexural \quad stiffness \quad of \quad laminate$$

$$\overline{Q}_k \quad : \quad the \quad reduced \quad transformed \quad stiffness \quad matrix \quad in \quad the \quad x-y \quad axes$$

$$z_{k+1} \quad : \quad for \quad value \quad at \quad top \quad of \quad the \quad layer \quad thickness$$

$$z_k \quad : \quad for \quad value \quad at \quad bottom \quad of \quad the \quad layer \quad thickness$$

$$QI: \quad Quasi\text{-}Isotropic \quad (0_i^o \pm 45_j^o 90_k^o)_{symmetric}, \quad A_{16} = A_{26} = D_{16} = D_{26} = 0, [B] = 0$$

SCHEME STRUCTURE

Configuration : Maintain

Section : Maintain

Layup : Revise – accounting for layup guidelines **(QI layers)**

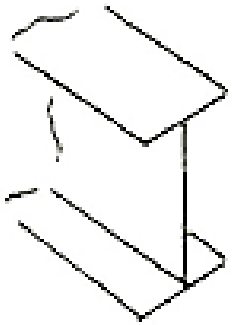

Flanges : $(\pm 45, 0_2, 90, 0_2, \pm 45, 0)|_s : 20\text{plies} = 2.5\text{mm}$

or $(\pm 45, 0, 90, 0_2, \pm 45, 0_2)|_s : 20\text{plies} = 2.5\text{mm}$

(for manufacturing consideration)

Web : $(\pm 45, 0, 90)|_s : 8\,plies = 1mm$

SCHEME MATERIAL

- Maintain basic layer material
- Define laminate material properties using laminate analysis
- See CLT program output for flange and web laminates
  (Run using arbitrary load values for convenience to obtain stiffness values only)

FLANGE LAMINATE

CCD program results

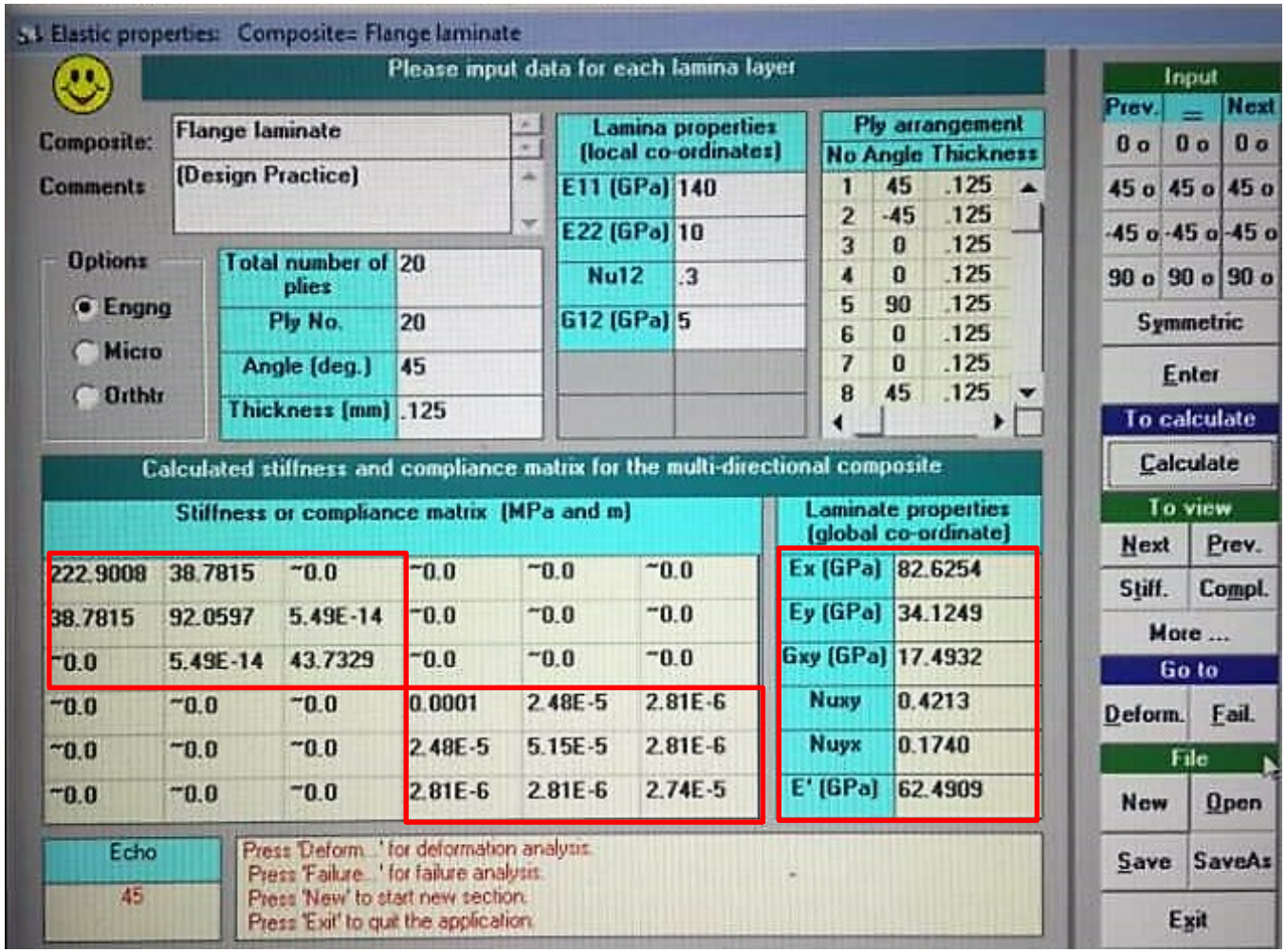

WEB LAMINATE

CCD program results

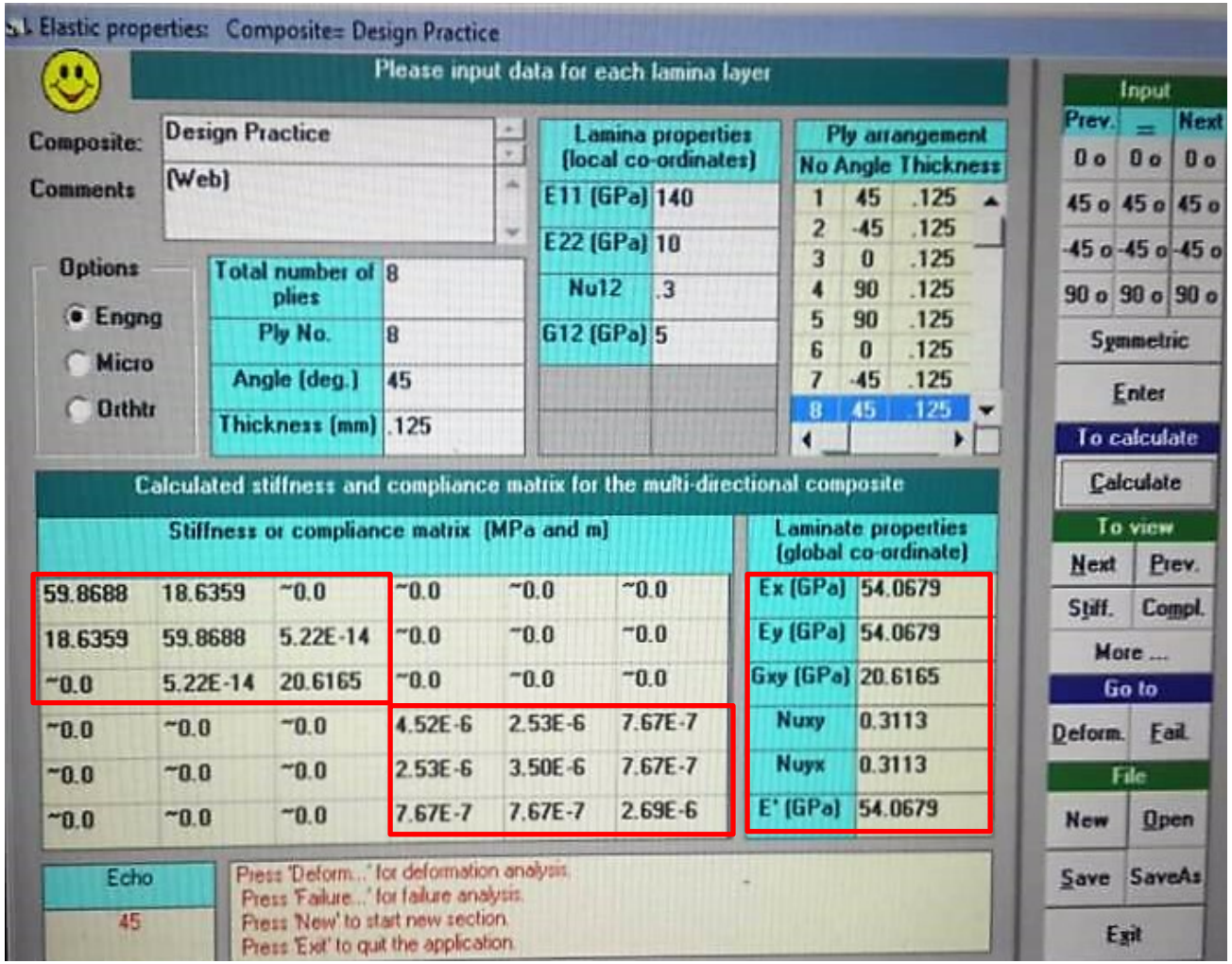

SCHEME MANUFACTURE

- **Layup :**

  by hand – over male tool half

- **Tooling :**

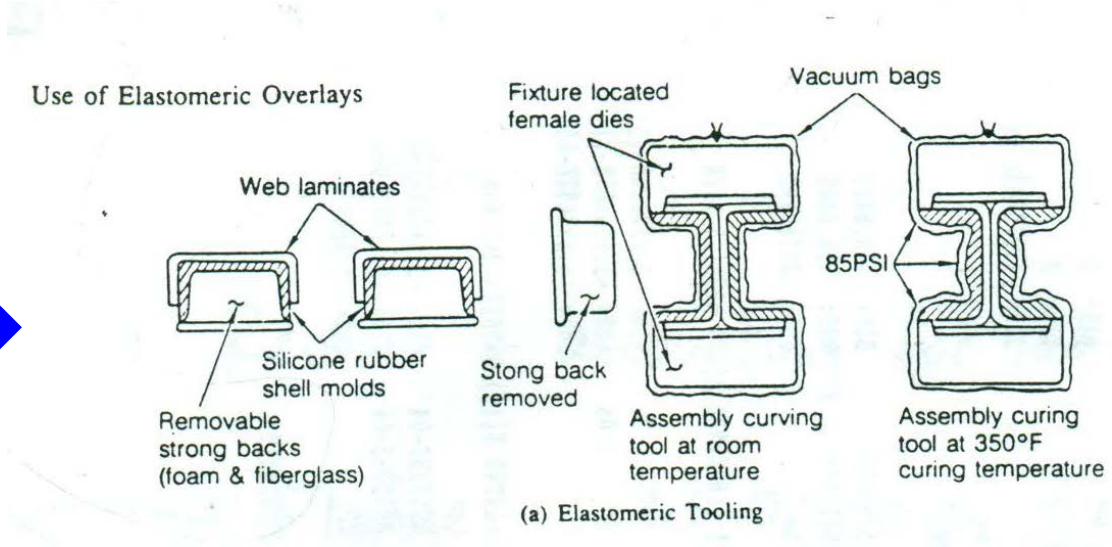

Cure + Consolidation : vacuum bag + autoclave

CHECK STRUCTURE

Stiffness

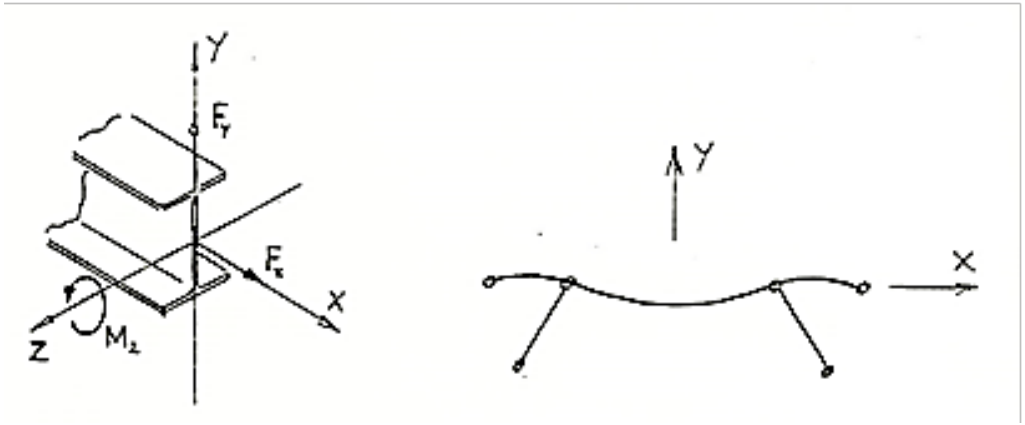

- Design for $\overline{E_x I_z} \geq EI$

$$\overline{E_x I_z} = \sum E_{x_i} I_{z_i}$$

$$= 2E_{x_f} I_{z_f} + E_{x_w} I_{z_w} \qquad : \text{accounting for flanges and web}$$

$$= 2 \times 82625 \times (60 \times 2.5) \times (\frac{100}{2})^2 + 54068 \times (\frac{1 \times 100^3}{12}) \qquad : \text{accounting for all layers using}$$

$$= 6.20 \times 10^{10} + 4.5 \times 10^7 \qquad \text{CLT program values}$$

$$= 6.20 \times 10^{10}\ Nmm^2$$

$$\rightarrow RF = \frac{6.20 \times 10^{10}}{5.992 \times 10^{10}}$$

$$\boxed{RF = 1.03}$$

Strength

*Flanges

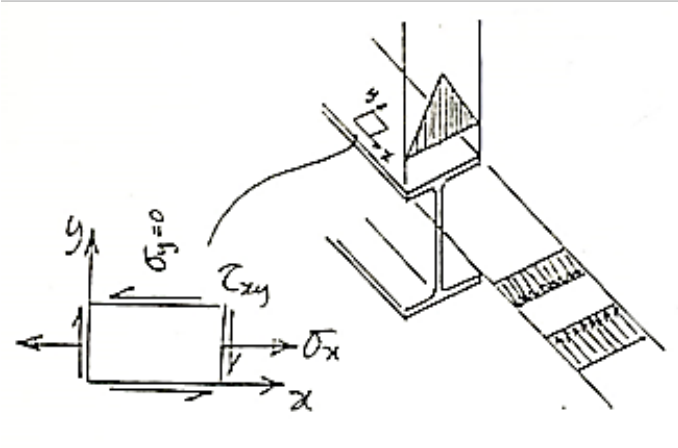

$$\tau_{xy_f} = \frac{q_{xy}}{t_f}, q_{xy_i} = \frac{F_y}{\overline{I_z}} \int tyds \frac{E_{x_i}}{\overline{E_x}}$$

$$\sigma_{x_f} = \frac{F_x}{\sum A} \cdot \frac{E_{x_f}}{\overline{E_x}}$$

$$\sigma_{x_f} = \pm \frac{M_z y_f}{\overline{I_z}} \cdot \frac{E_{x_f}}{\overline{E_x}}$$

- Design for actual stress condition allowable stress condition
- For 2nd check-work in terms of loading intensities N_x, N_y, N_{xy}
  - input N_x, N_y, N_{xy} to CLP program for laminate
  - find strength RF based on max strain criterion

$$N_{x_f} = \sigma_{x_{f_{total}}} \cdot t_f$$

where $$\sigma_{x_{f_{total}}} = \frac{F_x}{\sum A_i} \cdot \frac{E_{x_f}}{\overline{E_x}} + \frac{M_z(\pm y_f)}{\overline{I_z}} \cdot \frac{E_{x_f}}{\overline{E_x}}$$

$$\sum A_i = 2\times(60\times 2.5)+100\times 1 = 400mm^2$$

$$\overline{E_x} = \frac{\sum A_i E_{x_i}}{\sum A_i} = \frac{2\times(60\times 2.5)\times 82625+(100\times 1)\times 54068}{400} = 75486N/mm^2$$

(Note similar to Ally E value~70000 N/mm^2, but better distribution)

$$\overline{I_z} = \frac{\sum E_{x_i}\cdot I_{z_i}}{\overline{E_x}} = \frac{2\times 82625\times(60\times 2.5)\times(\frac{100}{2})^2+54068\times(1\times\frac{100^3}{12})}{75486} = 0.881x10^6\,mm^4$$

$$\sigma_{x_{f_{total}}} = -\frac{8909}{400}\cdot\frac{82625}{75486}+\frac{-1.51\times 10^6\times(\pm\frac{100}{2})}{0.881\times 10^6}\times\frac{82625}{75486}$$

$$= -24.38\pm 93.80 = 69.42,\ -118.18N/mm^2$$

$$N_{x_f} = (69.42,-118.18)\times 2.5 = 173.55,-295.45N/mm$$

$$N_{xy_i} = q_{xy_i} = \frac{F_y}{\overline{I_z}}\int tyds\cdot\frac{E_{x_i}}{\overline{E_x}}$$

- Note for flange $y = constant = \frac{b_w}{2}$ and $t_f = constant$

$$N_{xy_f} = \frac{F_y}{\overline{I_z}}\cdot t_f\cdot\frac{b_w}{2}\int_0^s ds\cdot\frac{E_{x_f}}{\overline{E_x}}$$

- Integrating from free edge to flange-web intersection, i.e. $s = \frac{b_f}{2}$

$$\int_0^s ds = [s]_0^{b_f/2} = \frac{b_f}{2}$$

$$N_{xy_f} = \frac{F_y}{\overline{I_z}} \cdot t_f \cdot \frac{b_w}{2} \cdot \frac{b_f}{2} \cdot \frac{E_{x_f}}{\overline{E_x}}$$

$$= -\frac{6375}{0.881 \times 10^6} \times 2.5 \times \frac{100}{2} \times \frac{60}{2} \times \frac{82625}{75486} = -29.70 N/mm$$

Running CLT program

$$\begin{cases} \textit{for trial flange Laminate} \\ \textit{and ultimate loading intensities :} \\ N_{x_f} = -295.5 N/mm \qquad - \textit{i.e. for top flange} \\ N_{xy_f} = -29.7 N/mm \end{cases}$$

Running CLT program (CCD)

Gives : $6.007 \ @ \ ply\ 3\ in\ mode\ 1-1^{-ve}$

$$RF_{ult} = 6.007\,(-1775.2 N/mm)$$

Where
RF 1-1^{-ve} mode : (-1775.2)/(-295.5)=6.007
RF 1-2 mode: (-178.7)/(-29.7)=6.017
→ ∴ **1-1^{-ve} failure mode**

Failure Modes of Orthotropic Materials

Failure is governed by different strength in different dire

Failure Stress	Failure Strain	Mode " Intra-lamina"
		Longitudinal tension "1-1/T"
		Longitudinal compression "1-1/C"
		Transverse tension "2-2/T"
		Transverse compression "2-2/C"
		In-plane shear "1-2"

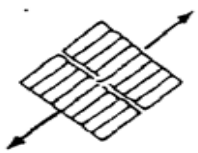

(Longitudinal tension)

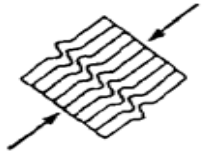

(Longitudinal compression)

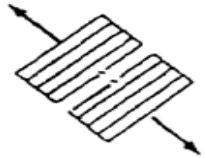

(Transverse tension)

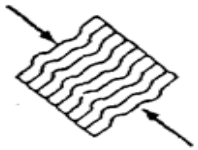

(Transvese compression)

(In plane shear)

FLANGE LAMINATE STRENGTH ANALYSIS BY CCD

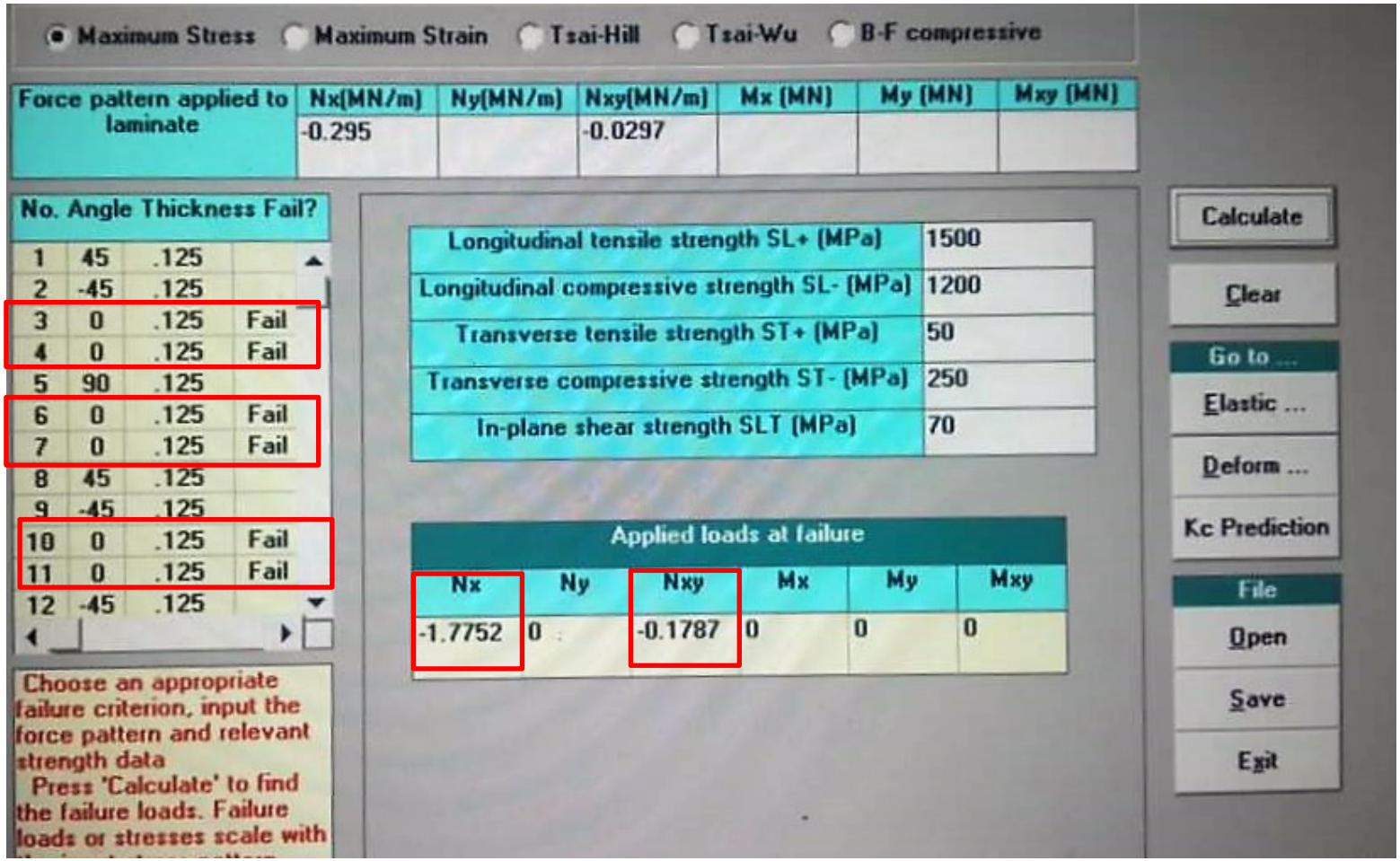

Strength

***Web**

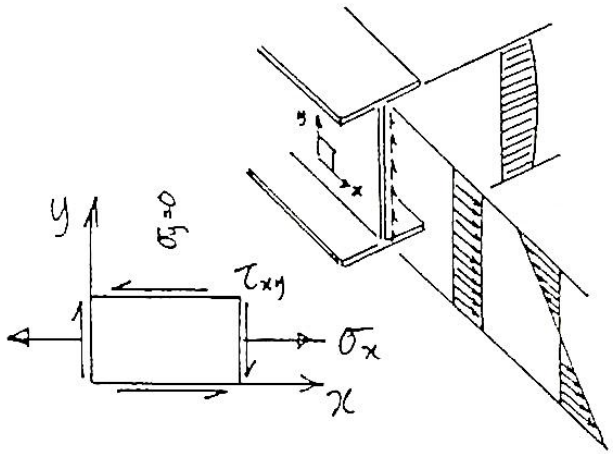

$$\tau_{xy_w} = \frac{q_{xy}}{t_w},\ q_{xy_i} = \frac{F_y}{\overline{I_z}} \int tyds \frac{E_x}{\overline{E_x}}$$

$$\sigma_{x_w} = \frac{F_x}{\sum A_i} \cdot \frac{E_{x_w}}{\overline{E_x}}$$

$$\sigma_{x_w} = \frac{M_z \cdot y_w}{\overline{I_z}} \cdot \frac{E_{x_w}}{\overline{E_x}}$$

- Design for actual stress condition allowable stress condition
  - In terms of loading intensities N_x, N_y, N_{xy}
  - Use CLT program run for max strain criterion RF values.

$$N_{x_w} = \sigma_{x_{w_{total}}} \cdot t_w$$

where $\sigma_{x_{w_{total}}} = \frac{F_x}{\sum A_i} \cdot \frac{E_{w_w}}{\overline{E_x}} \pm \frac{M_z(\pm y_w)}{\overline{I_z}} \cdot \frac{E_{x_w}}{\overline{E_x}}$

- Using $\sum A_i, \overline{E_x}, \overline{I_z}$ values as previously calculated

$$N_{x_w} = \sigma_{x_{w_{total}}} \cdot t_w$$

where $$\sigma_{x_{w_{total}}} = \frac{F_x}{\sum A_i} \cdot \frac{E_{w_w}}{\overline{E_x}} \pm \frac{M_z(\pm y_w)}{\overline{I_z}} \cdot \frac{E_{x_w}}{\overline{E_x}}$$

Using $\sum A_i, \overline{E_x}, \overline{I_z}$ values as previously calculated

$$\sigma_{x_{w_{total}}} = \frac{-8908}{400} \times \frac{54068}{75486} + \frac{-1.51 \times 10^6 (\pm \frac{100}{2})}{0.881 \times 10^6} \times \frac{54068}{75486}$$

$$= -15.95 \pm 61.38 = 45.43, -77.33 N/mm^2$$

$$N_{x_w} = (45.43, -77.33) \times 1.0 = 45.43, -77.33 N/mm^2$$

$$N_{xy_i} = q_{xy_i} = \frac{F_y}{\overline{I}_z}\int tyds \cdot \frac{E_{x_i}}{\overline{E}_x}$$

- Note, for web $y = (\frac{b_w}{2} - s)$ and t_w =constant

$$\rightarrow \quad N_{xy_w} = 2\times N_{xy_f} + \frac{F_y}{\overline{I}_z} t_w \int_0^s (\frac{b_w}{2} - s)ds \cdot \frac{E_{x_w}}{\overline{E}}$$

- Integrating from upper web intersection to mid web position

$$\int_0^s (\frac{b_w}{2} - s)ds = \left[\frac{b_w}{2}\cdot s - \frac{s^2}{2}\right]_0^{\frac{b_w}{2}} = \frac{b_w^2}{4} - \frac{b_w^2}{8} = \frac{b_w^2}{8}$$

$$N_{xy_w} = 2\times N_{xy_f} + \frac{F_y}{\overline{I}_z}\times t_w \times \frac{b_w^2}{8}\times\frac{E_{x_w}}{\overline{E}}$$

$$= 2\times(-29.7) + \frac{-6375}{0.881\times 10^6}\times 1.0\times\frac{100^2}{8}\times\frac{54068}{75486} = -59.4 - 6.48 = -65.88 N/m$$

Run CLT program $\begin{cases} \textit{for trial web laminate} \\ \textit{and ultimate loading intensities} \\ N_{x_w} = -77.33 N/mm \qquad \textit{i.e. for top of web} \\ N_{xy_w} = -65.88 N/mm \end{cases}$

Gives:

Running CLT program (CCD)

Last ply failure RF for ult. loads = 4.121 @ ply 1 in mode $1-1^{-ve}$

I.e. failure @ applied loads **RF= 4.121 (-318.7 N/mm)**

Where
RF 1-1^{-ve} mode : (-318.7)/(-77.33)=4.121
RF 1-2 mode: (-271.5)/(-65.88)=4.121
→ ∴ **1-1^{-ve} failure mode**

WEB LAMINATE STRENGTH ANALYSIS BY CCD

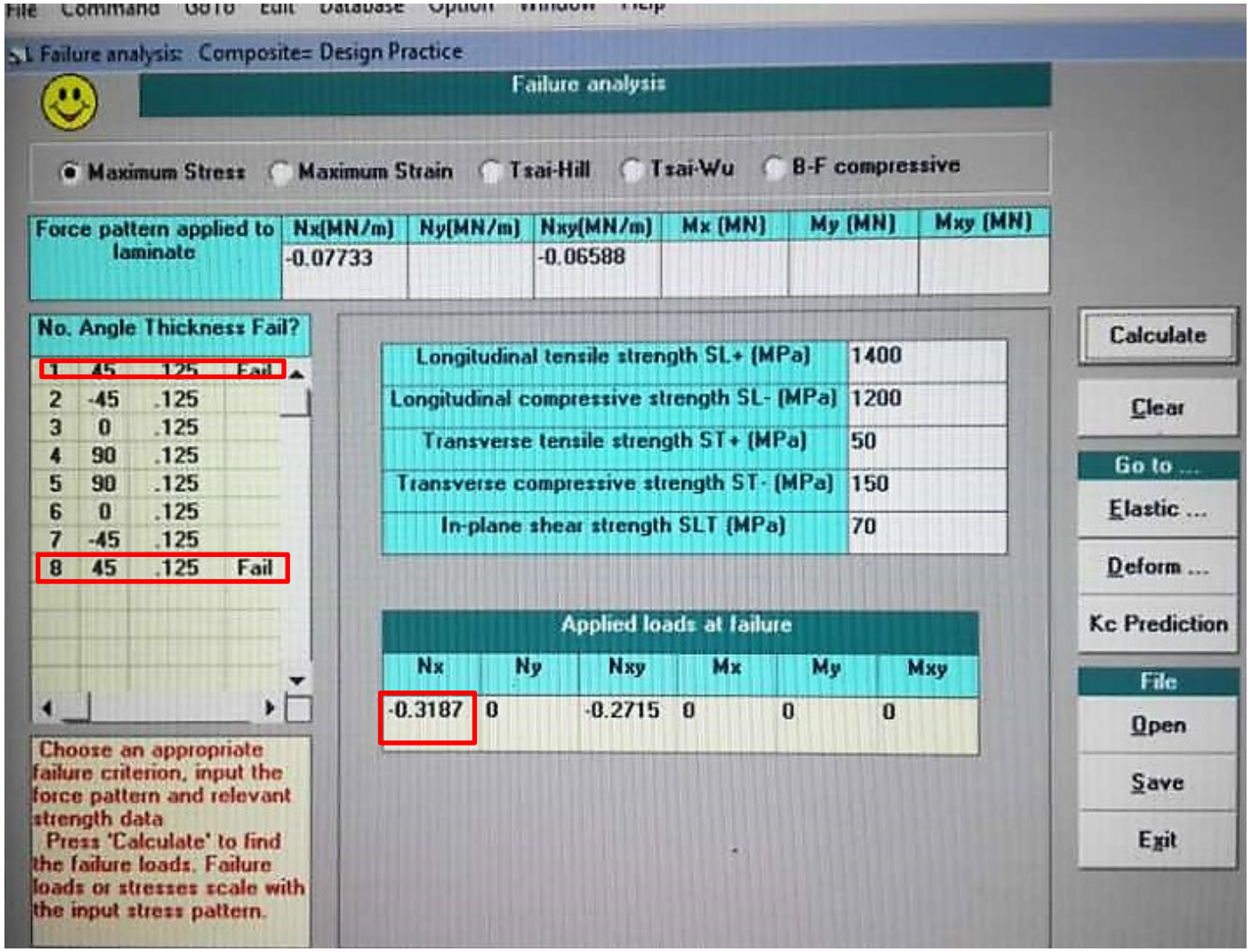

Stability

***Flanges**

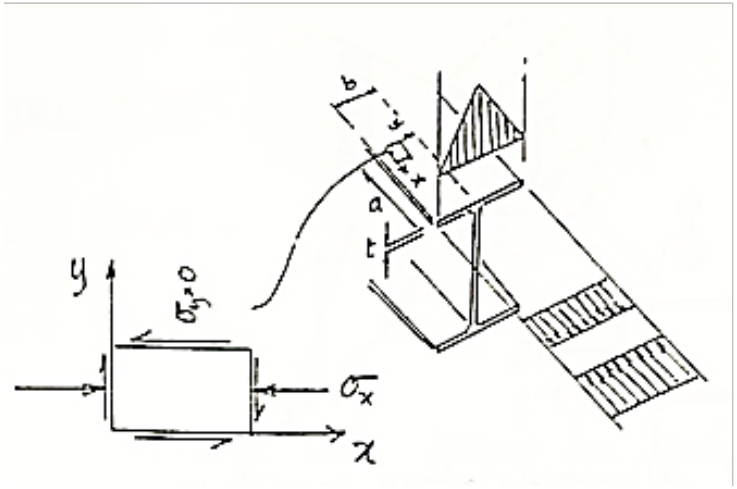

- Design not to exceed allowable stress condition
  . consider direct compressive stress only in this check
  . consider combined stress in a later check.
  . i.e. design for **direct compressive stress ≤ critical direct compressive stress**

$$N_{x_f} = -295.5 N/mm$$

. considering independent
. buckling wrt floor plate here

$$N_{x_{critical}} = \frac{k_0 (D_{11} D_{22})^{\frac{1}{2}}}{b^2} + \frac{C\pi^2 (D_{12} + 2D_{66})}{b^2}$$

for sp. orthotropic laminate
i.e. $A_{16} = A_{26} = D_{16} = D_{26} = 0$
see CLT program output for D values

- Calculating - using ESDU Fig. 1 Fig.2

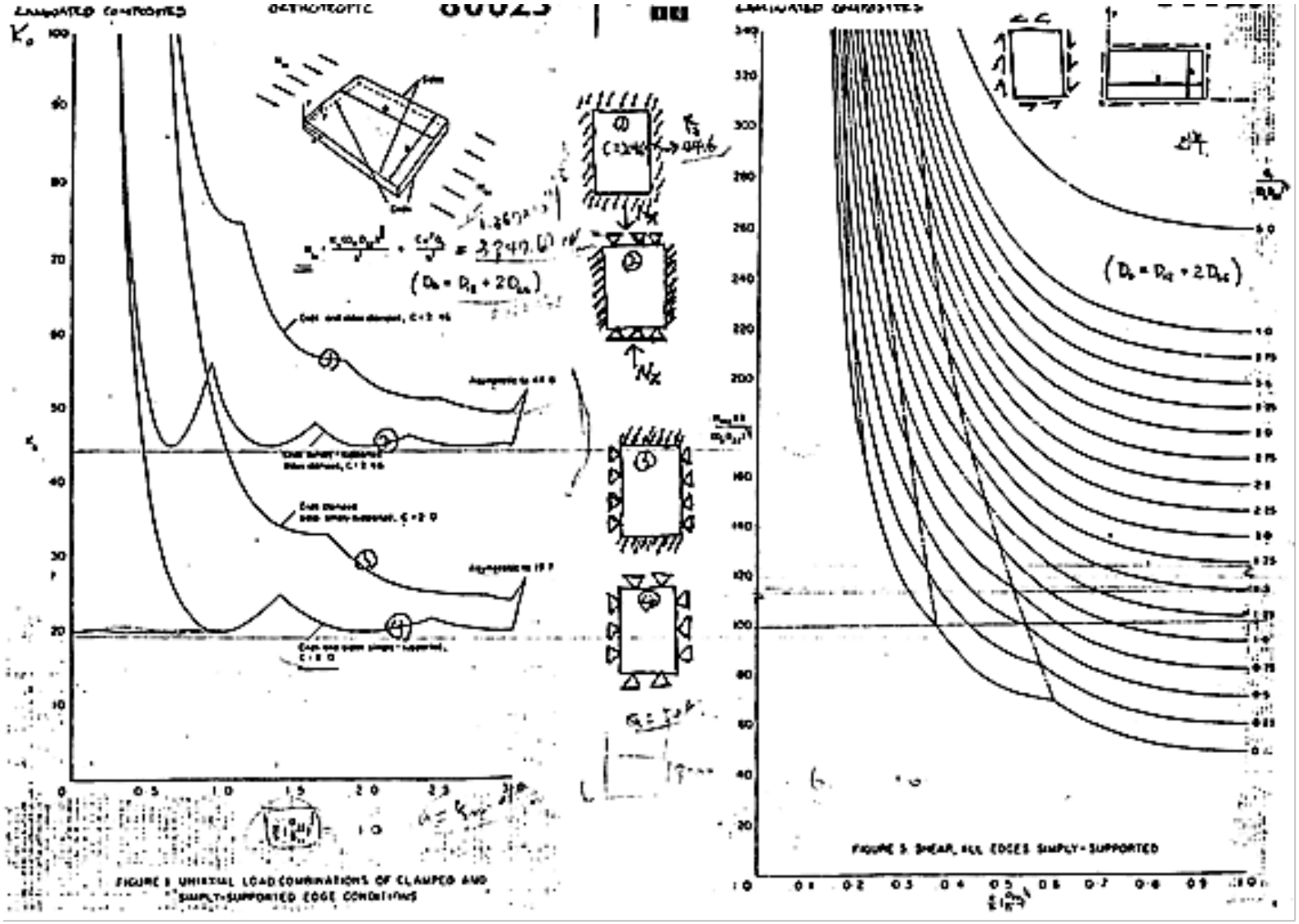

ESDU 80023

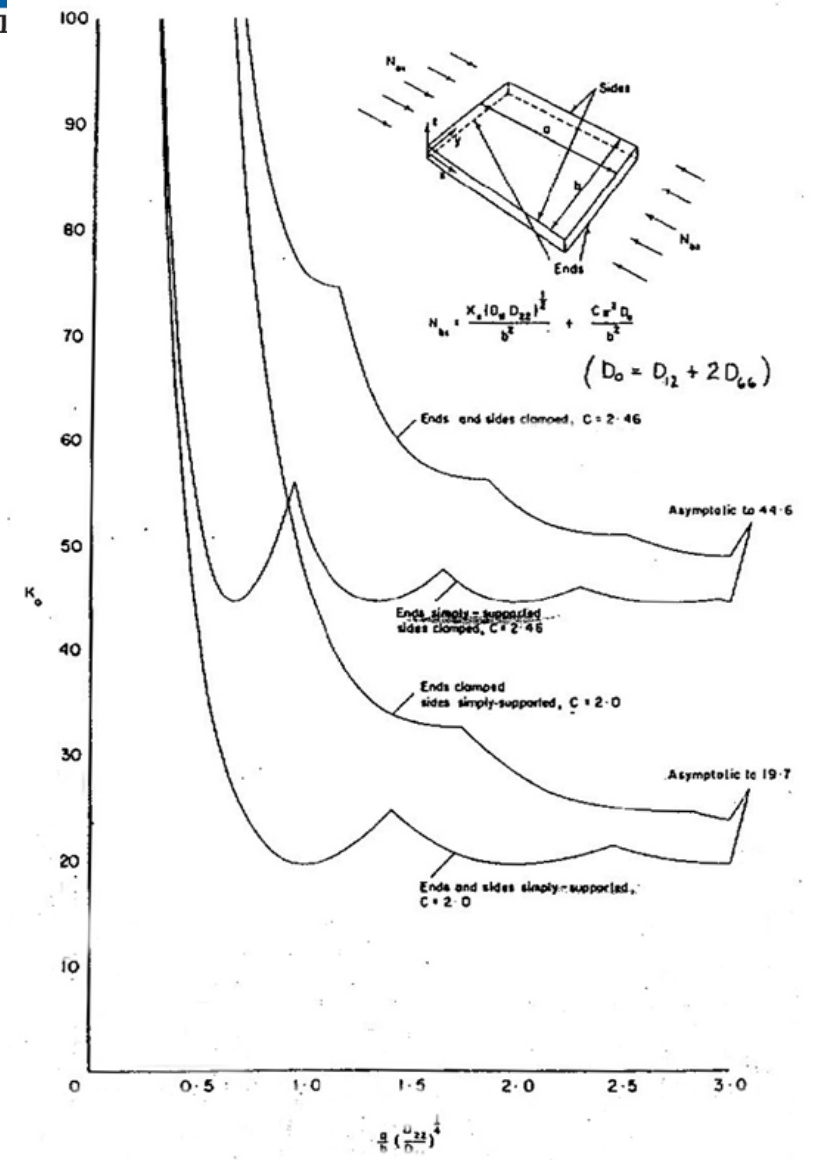

FIGURE 1. UNIAXIAL LOAD COMBINATIONS OF CLAMPED AND

ESDU 80023

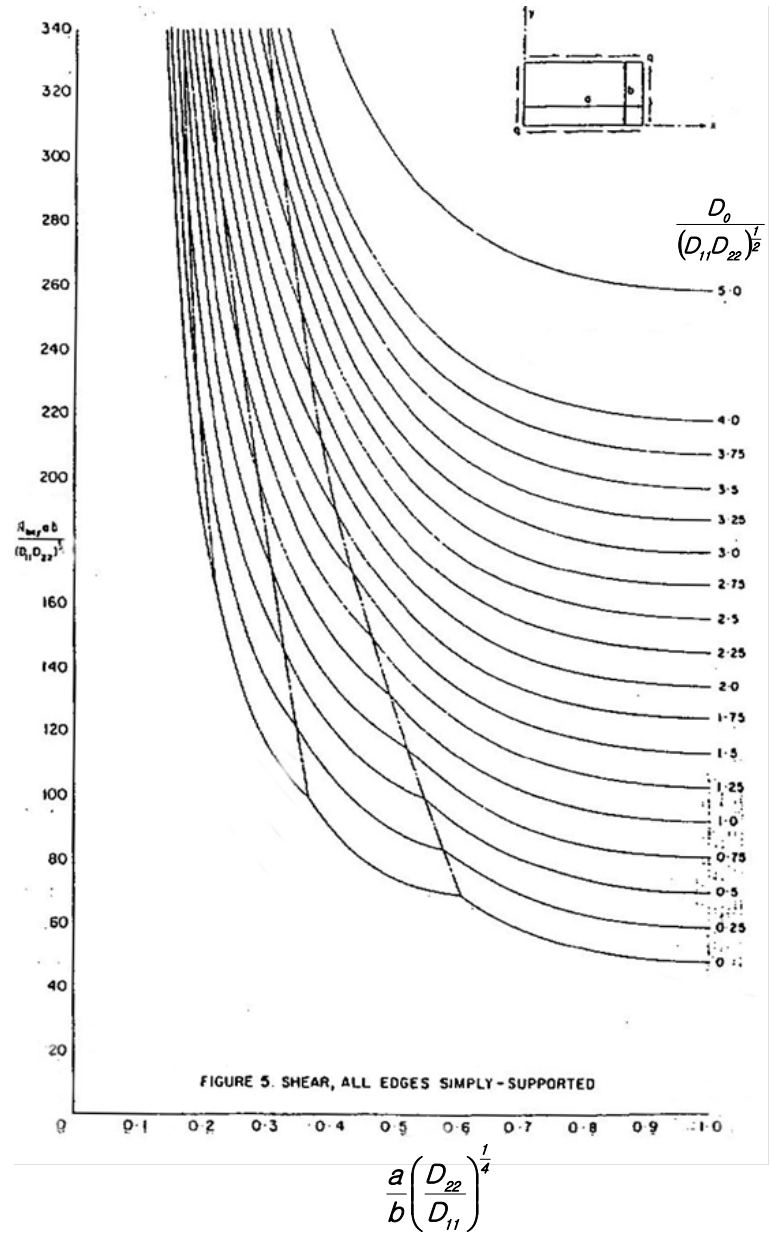

FIGURE 5. SHEAR, ALL EDGES SIMPLY-SUPPORTED

$$\left(\begin{array}{l} note \quad "one \quad side \quad free" \quad not \quad available \\ considering \quad equivalent \quad metal \quad buckling \quad curves \\ estimate \quad N_{x_{ceit}} \quad for \quad panel \quad with \quad free \quad edge \\ as \sim \frac{1}{10} \times N_{x_{crit}} \quad for \quad panel \quad with \quad simply \quad supported \quad edges \end{array}\right)$$

$$\left.\begin{array}{l} a = 1000 \\ b = \frac{b_f}{2} = \frac{60}{2} = 30 \end{array}\right\} \frac{a}{b}\left(\frac{D_{22}}{D_{11}}\right)^{\frac{1}{4}} = \frac{1000}{30} \times 0.84 = 28$$

→ Asymptote ESDU Fig.1

$c = 2,\ k_0 = 19.7$ for ss sides + fixed ends + asymptote

$$N_{x_{critical}} = \left(\frac{19.7 \times 72923}{30^2} + \frac{2 \times \pi^2 (79662)}{30^2}\right) \times \frac{1}{10} = 334.3\text{N/mm}$$

$$RF = \frac{334.3}{295.5} \qquad RF = 1.13$$

Note errors for $D_{16}, D_{26} \neq 0$

$$\sigma_{x_{critical}} = N_{x_{ceit}} / t_f = 334/2.5 = 133\text{N/mm}^2$$

Stability

***Webs**

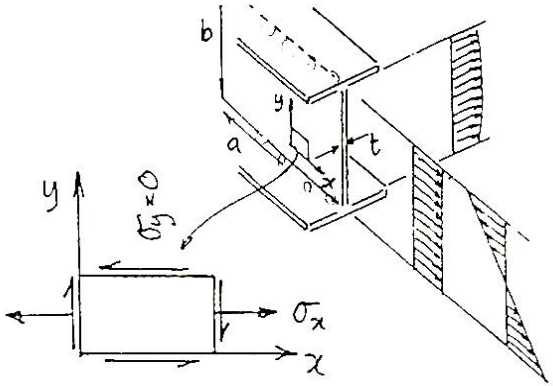

- Design not to exceed allowable stress condition
- Consider shear stress only in this

  i.e. **design for shear stress ≤ critical shears stress**

$$N_{xy_w} = -65.88 \le N_{xy_{crit}}$$

from ESDU Fig. 2 for sp. orthotropic laminate

i.e. $A_{16} = A_{26} = D_{16} = D_{26} = 0$

see CLT program output for D values

- Calculating using ESDU Fig. 2
  . For simply supported sides/ends.

$$\left.\begin{aligned} a &= 1000 \\ b &= b_w = 100 \end{aligned}\right\} \frac{a}{b}\left(\frac{D_{22}}{D_{11}}\right)^{\frac{1}{4}} = \frac{1000}{100} \times 0.938 = 9.38$$ → Asymptote ESDU Fig. 2

$$\frac{D_0}{(D_{11}D_{22})^{\frac{1}{2}}} = \frac{D_{12} + 2D_{66}}{(D_{11}D_{22})^{\frac{1}{2}}} = \frac{7919}{3980} = 1.99$$

Fig. 2 → $$\frac{N_{xy_{critical}}\, a \cdot b}{(D_{11}D_{22})^{\frac{1}{2}}} = 134$$

$$\rightarrow \quad N_{xy_{critical}} = 134 \times \frac{(D_{11}D_{22})^{\frac{1}{2}}}{ab} = 134 \times \frac{3980}{1000 \times 100} = \pm 5.33 N/mm$$

$$RF = \frac{-5.33}{-65.88} \qquad \underline{RF < 0.1}$$

- Note errors in estimate- but direct uniaxial and bending stresses still to be accounted for → **increase web laminate thickness**

SCHEME STRUCTURE

Configuration : Maintain

Section : Maintain

Layup : Increase web layup for buckling

$$\text{Ex.}\ \left((\pm\ 45)_2, 0, \pm 45, 90\right)\ |_s \quad : \ 16\text{plies} \ = \ 2\text{mm}$$

SCHEME MATERIAL

- Run CLT program to define new web laminate stiffness properties
  . see output

SCHEME MANUFACTURE

- Maintain

CHECK STRUCTURE

Stability

***Web**

- Calculation using ESDU Fig. 2
  - . For ss. sides/ends

$$\left.\begin{array}{l} \left.\begin{array}{l} a = 1000 \\ b = 100 \end{array}\right\} \dfrac{a}{b}\left(\dfrac{D_{22}}{D_{11}}\right)^{\frac{1}{4}} = \dfrac{1000}{100}\,0.952 = 9.52 \\ \dfrac{D_0}{\left(D_{11}\ D_{22}\right)} = \dfrac{D_{12} + 2D_{66}}{\left(D_{11}\ D_{22}\right)} \qquad \dfrac{66509}{30895} = 2.15 \end{array}\right\} Fig\ 2 \rightarrow \frac{N_{xy}ab}{\left(D_{11}\ D_{22}\right)^{\frac{1}{2}}} = 140$$

$$\rightarrow N_{xycritical} = 140 \times \frac{\left(D_{11}\ D_{22}\right)}{a \cdot b} = \frac{140 \times 30895}{1000 \times 100} = \pm 43.25 N/mm$$

$$\rightarrow RF = \frac{-43.25}{-65.88} \qquad \underline{RF = 0.66}$$

Because web buckling load with fixed sides/ends BC ≥ buckling load with ss. Sides and ends, RF=0.66 is OK.

- Refine check to include combined stresses + correct for general or orthotropy

CHECK STRUCTURE

Stiffness	Secondary Loading	Impact
Strength	Through thickness	Fatigue
Stability	Holes + notches	Certification
	Joint	
	Sandwich panel	

CHECK MATERIAL

Allowables + Design Limits
Costs , Weights

CHECK MANUFACTURE

Process Plan
Costs , Lead Times

TRADE-OFF

w.r.t : structural efficiency
compatibility, simplicity
weights, costs, lead times

} key design objectives
Fitness for purpose
Requirements

E.g. for trial composite I-beam at end of 2nd iteration :

Weights :

*Original ally beam (helped by floor plate)

Weight per unit length = $A.\rho = 450 \times 2.8 \times 10^{-3} = 1.26 g/mm = 1.26 kg/m$

*Composite I beam: $A.\rho = (2 \times 60 \times 2.5 + 100 \times 2) \times 1.5 \times 10^{-3} = 0.75 kg/m$

(significant weight margin in hand)

Costs

*Original ally beam – extruded / machined

*Composite beam – expensive material / manufacture

- Must be offset by significant gains

e.g. reduced weight

reduced parts / assembly

NEW COMPOSITE DESIGN Trial 2

SCHEME STRUCTURE

Configuration : No supports

Section : Top hat/ core

Layup : shear web buckling

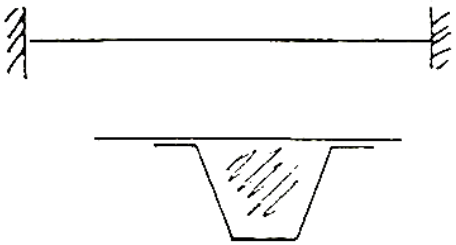

SCHEME MATERIAL

- Other materials/ types : glass , kevlar / woven

SCHEME MANUFACTURE
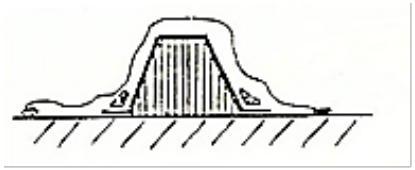
- Layup over shaped core co-cure / co-bond No tool!